FORM FIT Hood Protector

Installation Instructions

HD 20M16
Toyota Prius (2016-2022)

Kit Contents

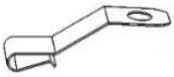

Large metal mounting brackets (2)

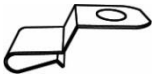

Small metal mounting brackets (4)



Anti-abrasion pads (6)



Pins (6)



#6 x 5/8” flat head screws (6)

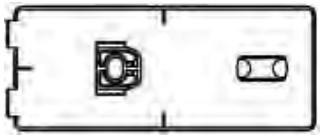

Large adhesive pedestals (2)

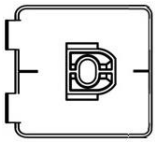

Small adhesive pedestals (4)



Automotive surface cleaner (1)

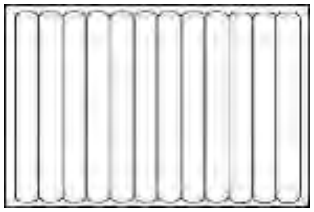

Re-usable tape strips (1)

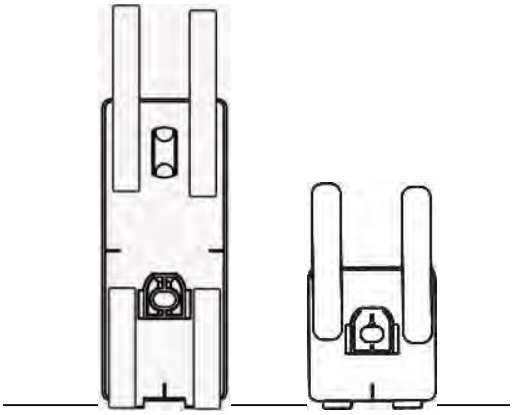

Installation Procedure

NOTE: Vehicle surface temperature should be a minimum 15°C / 59°F.

1. Ensure the hood is clean and dry, inside and out.

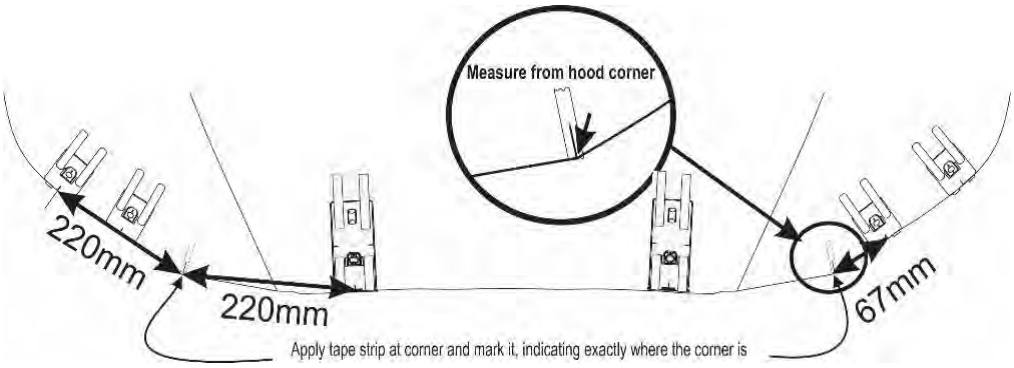

2. Dry fit the adhesive pedestals using masking tape or the reusable tape strips supplied to hold them in position.

   The positions of the pedestals are shown in the **illustration**.

   Use the center mark on the leading edge of the pedestal for accurate measuring. The fingers incorporated on the leading edge of the pedestal will help ensure the correct position relative to the hood edge. When correctly positioned the fingers should contact the leading edge of the hood.

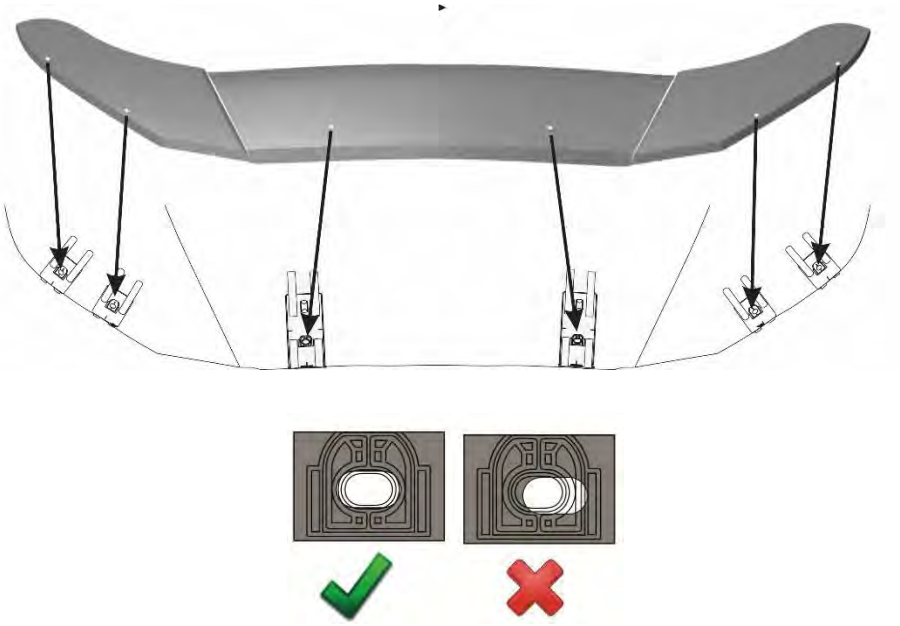

3. Place the hood protector onto the pedestals to confirm all attachment locations are aligned

- If necessary, reposition the pedestals so all attachment locations are aligned and the hood protector is centered

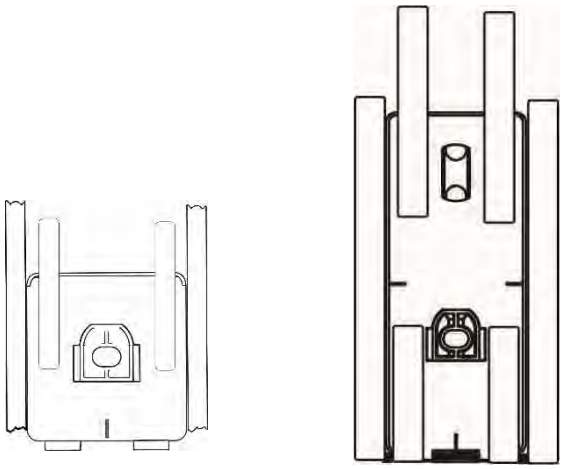

4. Remove the hood protector and outline the perimeter of the pedestals with masking tape or the reusable tape strips supplied.

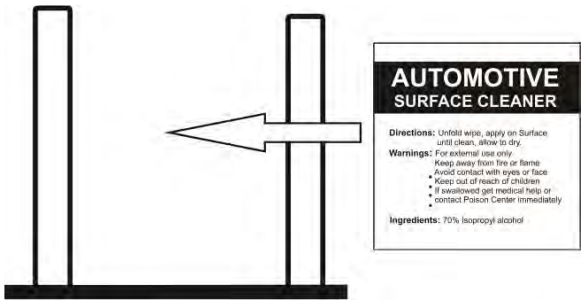

5. Remove the pedestals and thoroughly clean the outlined area with the automotive surface cleaner. Wipe dry with a clean cloth or paper towel. This will ensure all contaminants are removed from the vehicle surface in the adhesive bonding area.

⚠ **Important! Proper preparation of the hood surface will ensure maximum adhesive bond**.

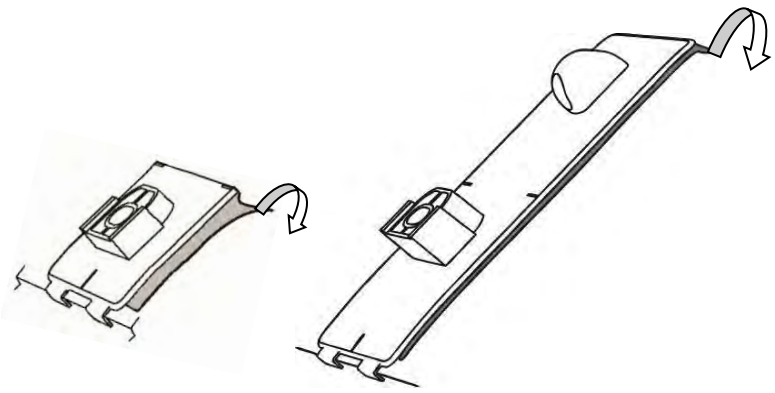

6. One pedestal at a time, remove the red protective backing from the adhesive and install on the hood surface.

⚠ **<u>Use caution to avoid contaminating the adhesive surface</u>.**

Tip: Hook the fingers on the pedestal over the hood edge and rotate the unit into position.

After installation, remove the masking tape and “wet out” the tape to the hood surface by applying pressure with your thumb around the surface of the pedestals.

⚠ **<u>Important:</u> “wetting out” the pedestals will ensure maximum adhesive bond.**

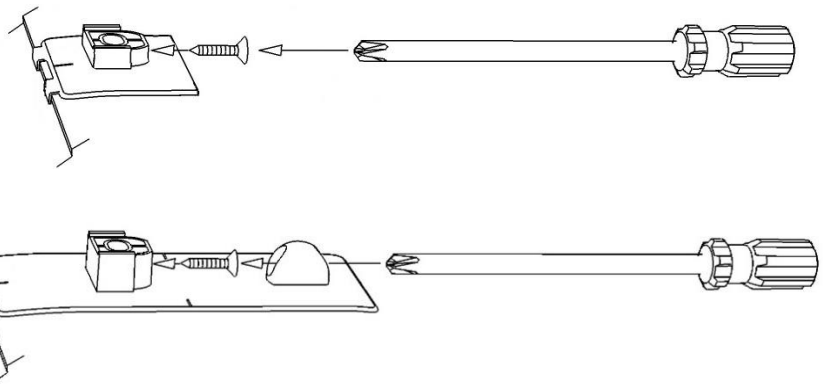

7. Start a screw into each pedestal a few turns

   The tip of the screw must not protrude into the hole where the attachment pin will install later.

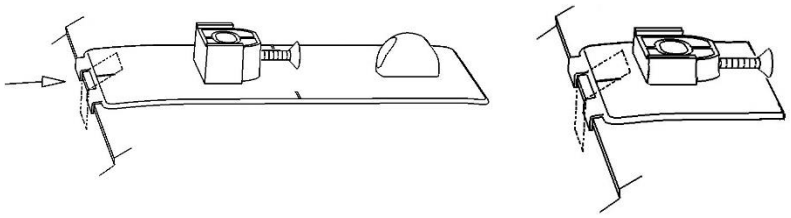

8. Peel and fold an anti-abrasion film pad in half over the hood edge between the fingers on each pedestal.

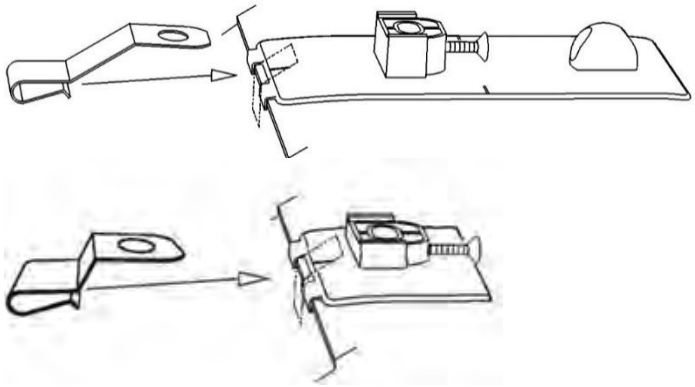

9. Push a metal mounting bracket over the hood edge on top of the anti-abrasion pad installed previously.

   Ensure the bracket is fully engaged over the hood edge and the hole in the bracket is aligned with the hole in the pedestal.

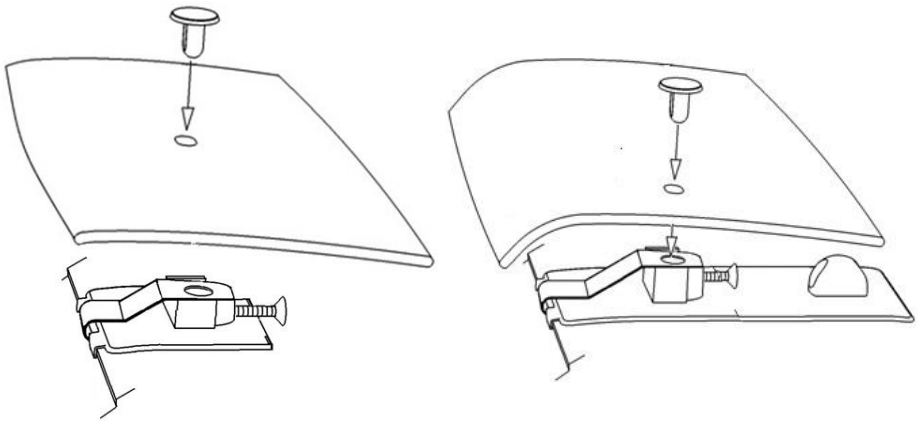

10. At the pedestal locations, insert a pin through the protector and into the pedestal.

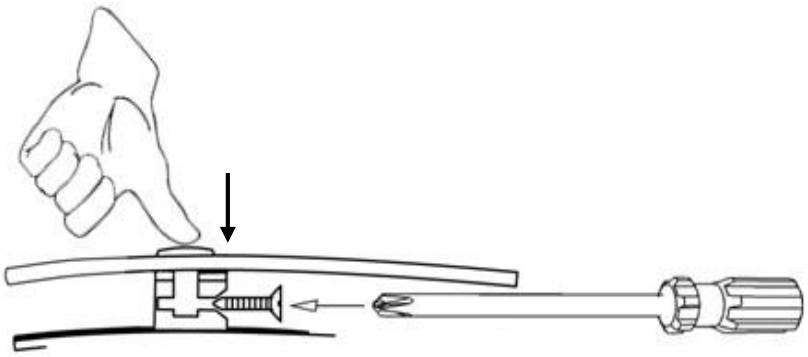

11. Maintain slight pressure on the pin, to ensure proper seating of the components, while simultaneously tightening the screw.

CAUTION: Use care to avoid damaging the vehicle surface while tightening the screws.

NOTE:
Proper installation of the adhesive pedestal system requires the use of a #2 Phillips screwdriver, preferably with a long shaft. Use of the correct screw driver will facilitate a trouble free installation. Do not attempt to use #1 or smaller Phillips screwdriver or any type of electric screwdriver.

CAUTION:
-*Do not* expose the vehicle/hood protector to car washes for a 24 hour period following the installation to allow the adhesive pedestals sufficient time to reach full bond strength.
-On some vehicles it may be necessary to adjust the hood bumpers and/or latch for proper clearance.

CARE INSTRUCTIONS:
-Clean the protector with a mild soap and water solution or plastic cleaner only. Do not use chemicals or solvents.
-Periodically check to make sure protector is secure. Avoid using automatic car washes.
-Do not pull on the protector when opening or closing the hood.