FORM FIT Hood Protector
Installation Instructions

HD24A10
Lexus RX/RXH (2010 - 2015)

PARTS LIST

Hood Protector

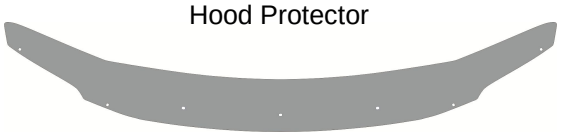

Large Pedestals (3)

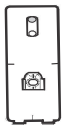

Small Pedestals (4)



Pins (7)



6 x 5/8" Flat Head Screws (7)



Bumpons (2)



Anti-abrasion Film Pads (3)



Large Metal Mounting Brackets (3)

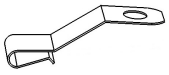

Alcohol Wipes (1)



Tape strip sheet (repositionable) (1)

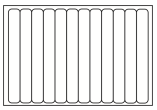

TOOLS AND SUPPLIES REQUIRED

- Long Shank Phillips Screwdriver #2
- Tape Measure
- Grease Pencil
- Masking Tape
- Dry soft cloth or paper towel

- **This product uses a 3M adhesive that requires installation and curing temperatures of 15° to 43°C (60° to 110°F) for 1 hr to develop maximum adhesion to the surface.Failure to meet these conditions will void warranty**

CAUTION: *Do not* expose the vehicle / hood protector to extreme environments (weather) or car washes for a 24 hour period following the installation to allow the adhesive pedestals sufficient time to reach full bond strength.

CARE INSTRUCTIONS:

-Clean the protector with a mild soap and water solution or plastic cleaner only. Do not use chemicals or solvents.

-Periodically check to make sure the bumpons are in place and the protector is secure..

-Avoid using automatic car washes.

-Do not pull on the protector when opening or closing the hood.

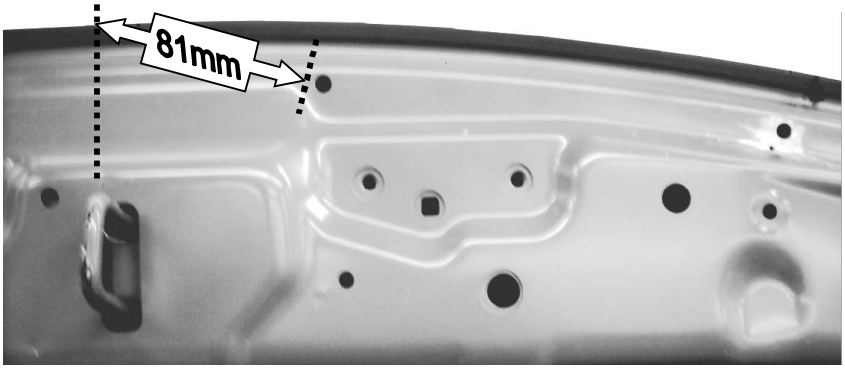

Installation Procedure

1. Be sure that the hood is clean and dry inside and out.

2. Open the hood of the vehicle. Find the centre of the hood and mark it. *See illustration.*

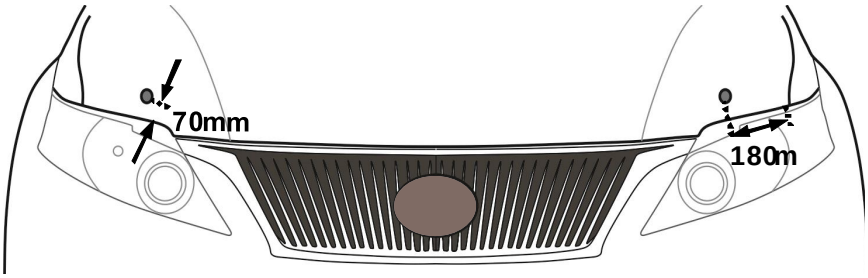

3. Install the two (2) bumpons as shown. **Attention: Bumpons must be installed on the hood, not on the deflector.** If the bumpons are installed on the deflector, they may wear through the paint.

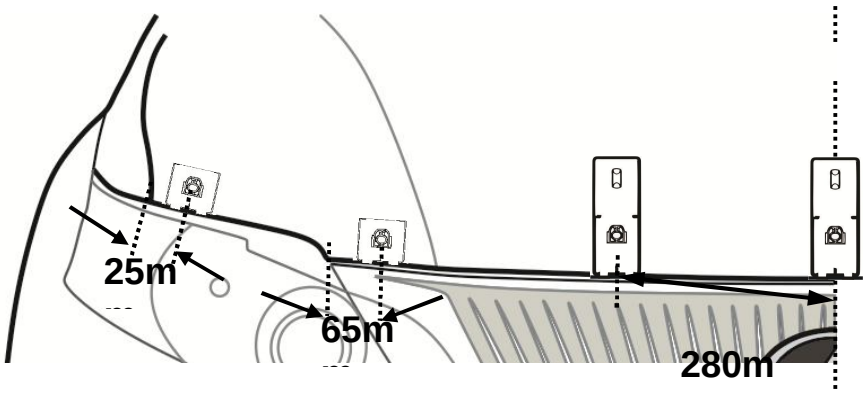

4. Dry fit the adhesive pedestals using masking tape or the repositionable tape strips supplied to hold them in position.

5. The positions of the pedestals are shown in **illustration**. Use the center mark on the leading edge of the pedestal for accurate measuring. The fingers incorporated on the leading edge of the pedestal will help ensure the correct position relative to the hood edge. When correctly positioned the fingers should contact the leading edge of the hood.

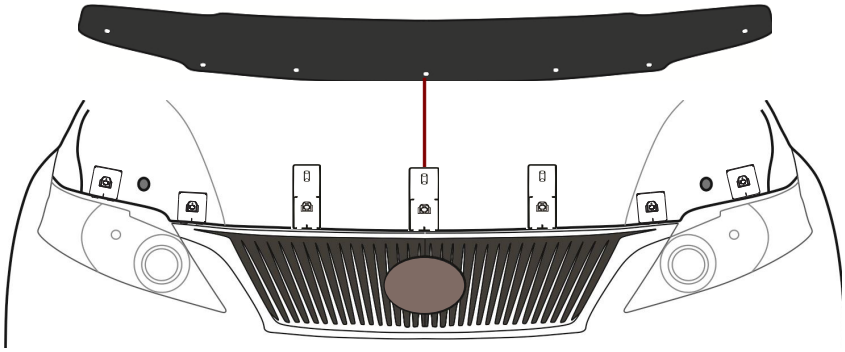

6. Place the protector temporarily onto the adhesive pedestals, aligning the holes in the protector with the holes in the pedestals. This step will allow you to confirm the position of the adhesive pedestals.

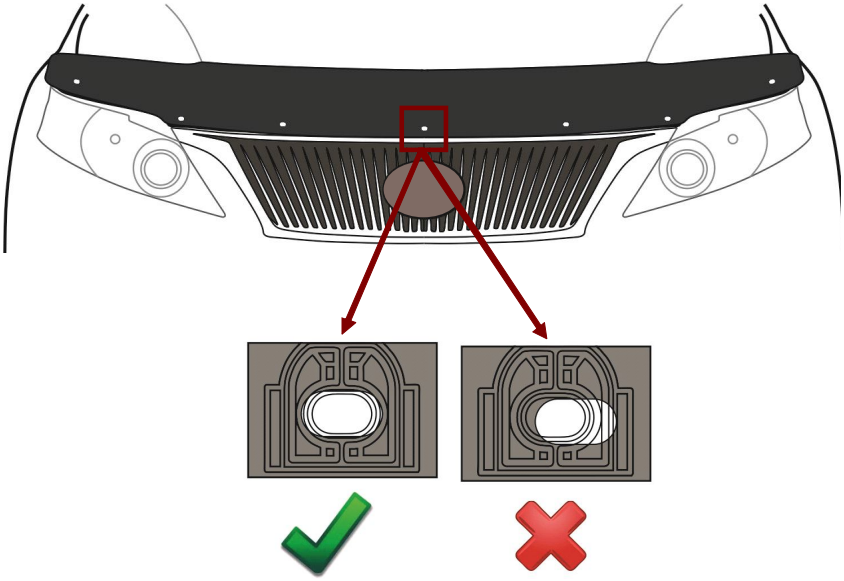

7. Confirm the correct positioning of the pedestals by adjusting the pedestal position on the hood to align with the holes in the hood protector.

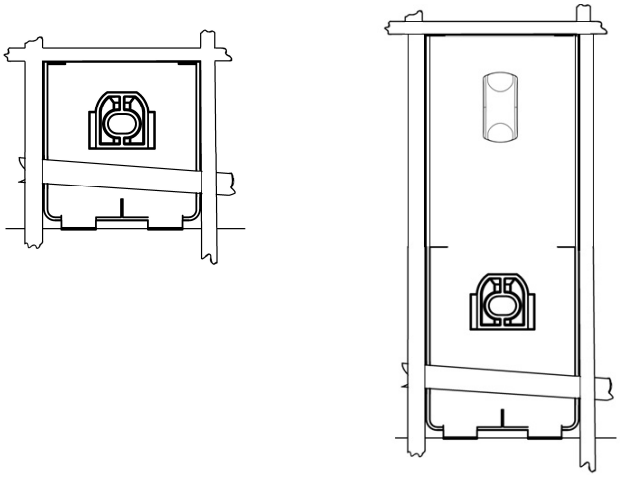

8. Remove the hood protector and outline the perimeter of the pedestals with masking tape or the repositionable tape strips supplied to help with the final installation.

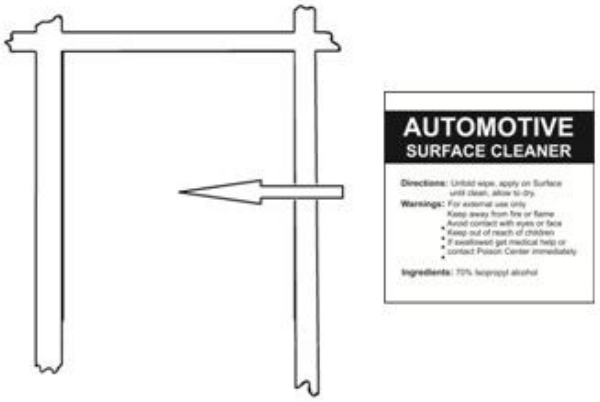

9. Remove the pedestals and thoroughly clean the outlined area with the alcohol wiping pad. Dry with a clean cloth or paper towel. This will insure all wax, finger prints and oils are removed from the hood surface in the bonding area.

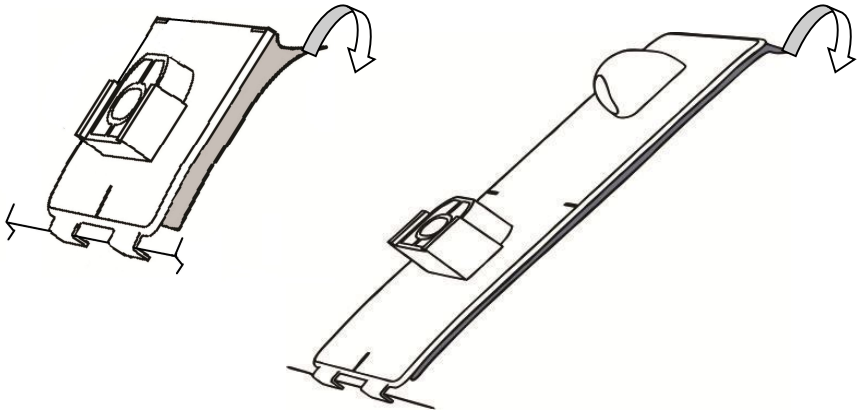

10. Remove the protective backing from the adhesive on the pedestals and install on the hood surface.

Tip: Hook the fingers on the pedestal over the hood edge and rotate the unit into position. After installation, remove the masking tape and “wet out” the tape to the hood surface by applying pressure with your thumb around the surface of the pedestals.

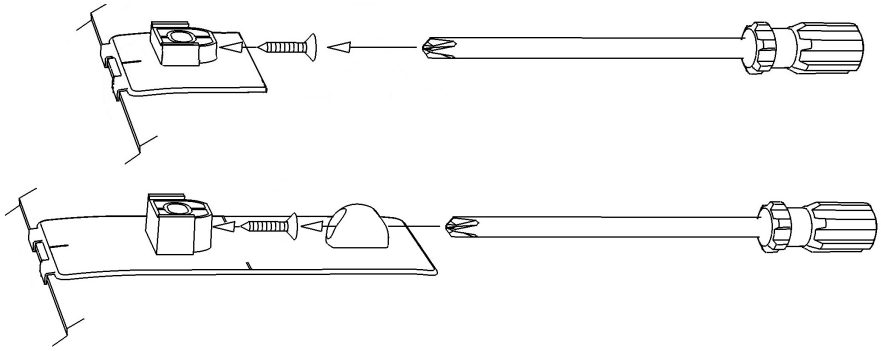

11. Start a #6 x 5/8 flat head screw into each pedestal a few turns. The tip of the screw must not protrude into the hole where the attachment pin will install later.

NOTE: Only large pedestals above the grill get the next two steps

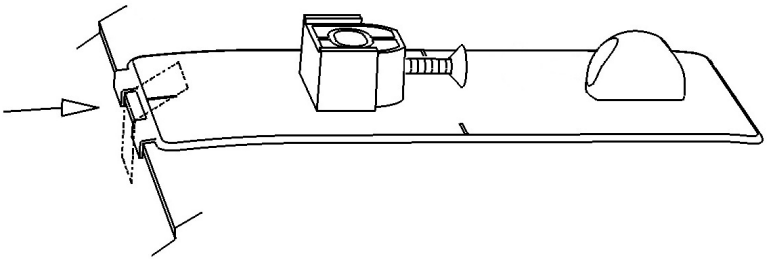

12. Peel and fold the small anti abrasion film pad in half over the hood edge between the fingers on the pedestal.

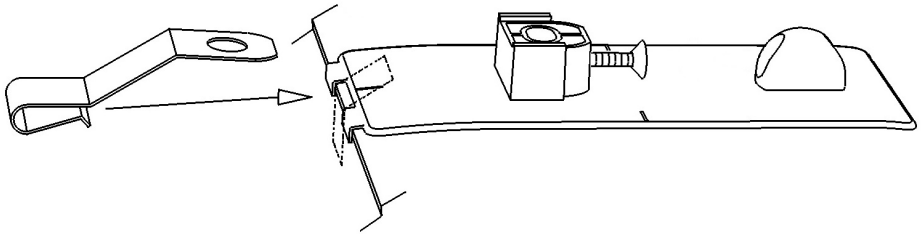

13. Push a metal mounting bracket over the hood edge on top of the anti abrasion pad installed previously. Ensure the bracket is fully engaged over the hood edge and the hole in the bracket is aligned with the hole in the pedestal.

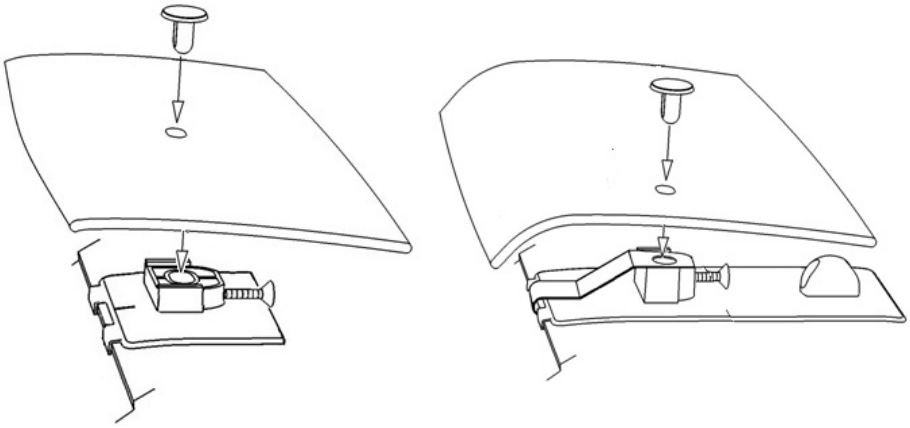

14. Place the hood protector onto the adhesive pedestals mounted on the hood. At the pedestal locations, drop a pin through the protector and into the pedestal.

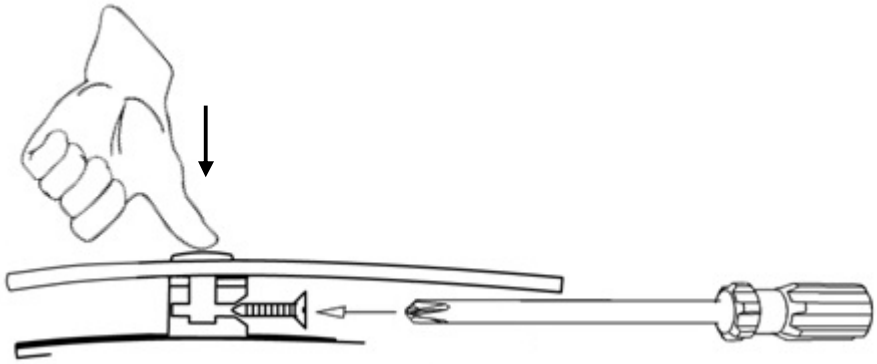

15. Maintain slight pressure on the pin, to ensure proper seating of the components, while simultaneously tightening the screw.