FORMFIT Hood Protector

Installation Instructions

HD 9D13-2

Honda Accord 2 Door (2013-2017)

PARTS LIST

Hood Protector



Large Pedestals (3)

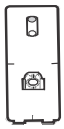

Small Pedestals (4)



Pins (7)



6 x 5/8ò Flat Head Screws (7)



Anti-abrasion Film Pads (7)



Large Metal Mounting Brackets (3)

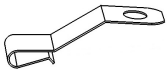

Small Metal Mounting Brackets (4)

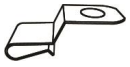

Alcohol Wipes (1)



Tape strip sheet (repositionable) (1)

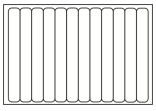

TOOLS AND SUPPLIES REQUIRED

Long Shank Phillips Screwdriver #2
Tape Measure
Grease Pencil
Masking Tape

INSTALLATION

- Make sure the vehicle is clean and completely dry before installation.
- This product uses a 3M adhesive product that requires installation and curing temperatures of at least 20°C/ 70°F for 24 hours to develop maximum adhesion to the surface. Failure to install this product at the proper temperature or allow adequate curing time before use is not covered under warranty.
- Proper installation of the adhesive pedestal system requires the use of a #2 Phillips screwdriver, preferably with a long shaft. The shaft of the screwdriver needs to fit through the hole in the pedestal. Use of the correct screw driver will facilitate a trouble free installation. Do not attempt to use #1 or smaller Phillips screwdriver or any type of electric screwdriver.

1. Using a tape measure and grease pencil, mark the center of the hood.
   - Use the feature lines on the hood or symmetrical holes on the underside of the hood to aid in finding the center of the hood; however it is important to use a tape measure for accurate placement.
2. Dry fit the adhesive pedestals using masking tape or the repositionable tape strips supplied to hold them in position.

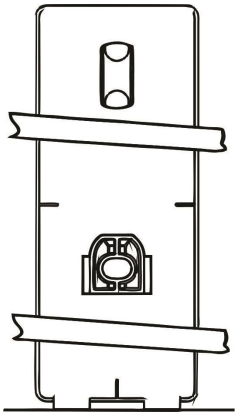

Large Pedestal

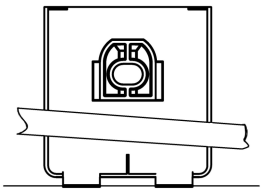

Small Pedestal

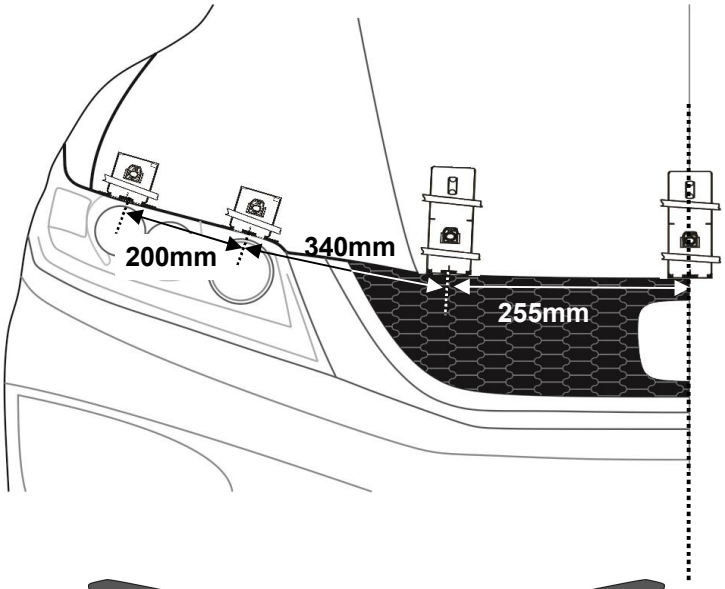

3. The positions of the pedestals are shown in the **illustration**. Use the center mark on the leading edge of the pedestals for accurate measuring. The fingers incorporated on the leading edge of the pedestal will help ensure the correct position relative to the hood edge. When correctly positioned the fingers should contact the leading edge of the hood.

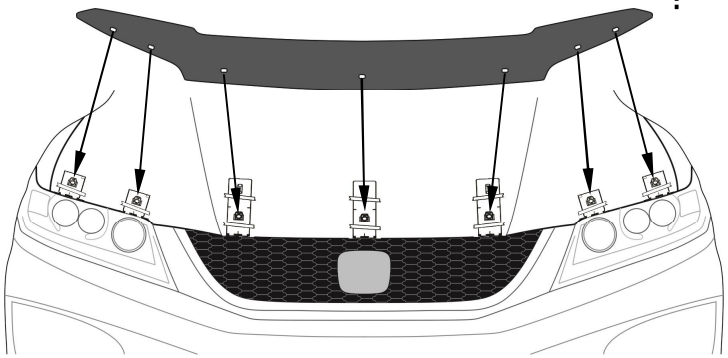

4. Place the hood protector on the pedestals to confirm proper positioning. Ensure the holes in the deflector align with those in the pedestals and confirm the protector is centered on the hood by measuring the overhang of the protector at both sides of the hood. The measurement should be the same on both sides +/- 2mm. If necessary, reposition the pedestals so all attachment positions are correct and the deflector is well centered.

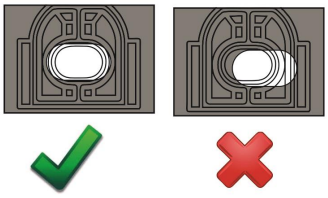

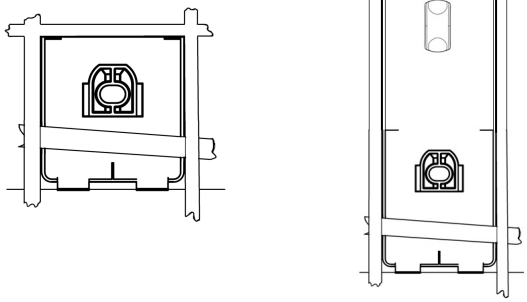

5. Remove the hood protector, and outline the perimeter of the pedestals with masking tape or the repositionable tape strips supplied to help final installation.

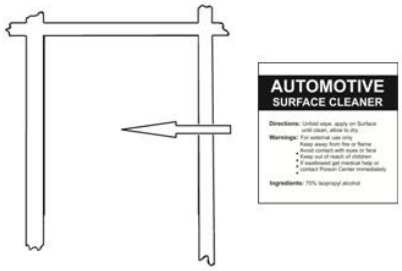

6. Remove the pedestals and thoroughly clean the outlined area with the alcohol wiping pad. This will insure all wax, finger prints and oils are removed from the hood surface in the bonding area.

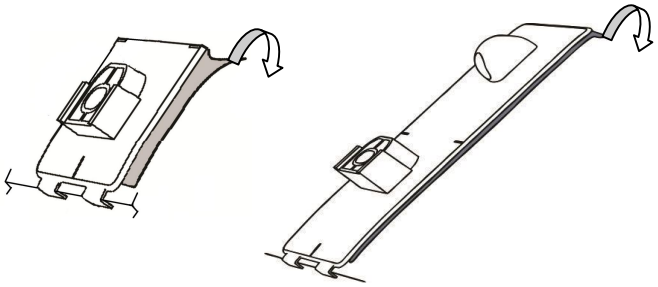

7. Remove the protective backing from the adhesive on the pedestals and install on the hood surface.

Tip: Hook the fingers on the pedestal over the hood edge and rotate the unit into position. After installation, remove the masking tape and ñwet outòthe tape to the hood surface by applying pressure with your thumb around the surface of the pedestals.

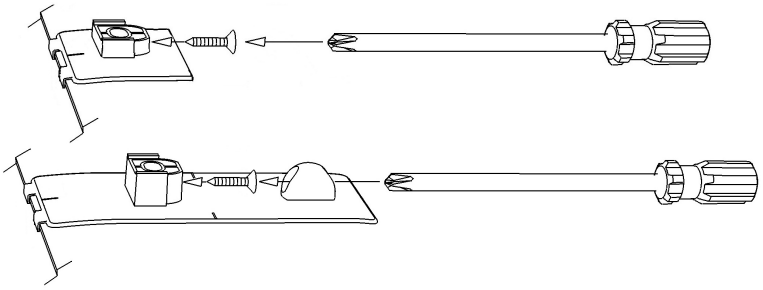

8. Start a #6 x 5/8 flat head screw into each pedestal a few turns. The tip of the screw must not protrude into the hole where the attachment pin will install later.

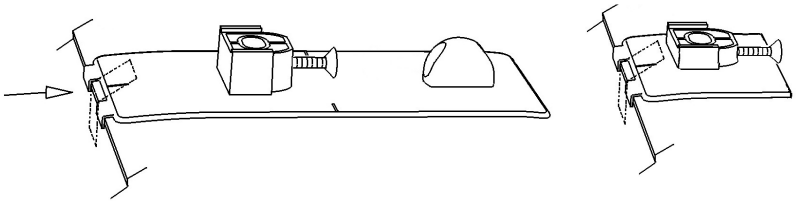

9. Peel and fold the anti abrasion film pad in half over the hood edge between the fingers on the pedestal.

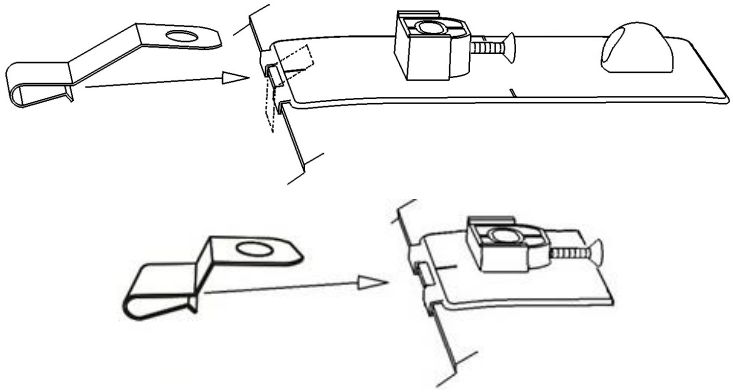

10. Push a metal mounting bracket over the hood edge on top of the anti abrasion pad installed previously. Ensure the bracket is fully engaged over the hood edge and the hole in the bracket is aligned with the hole in the pedestal.

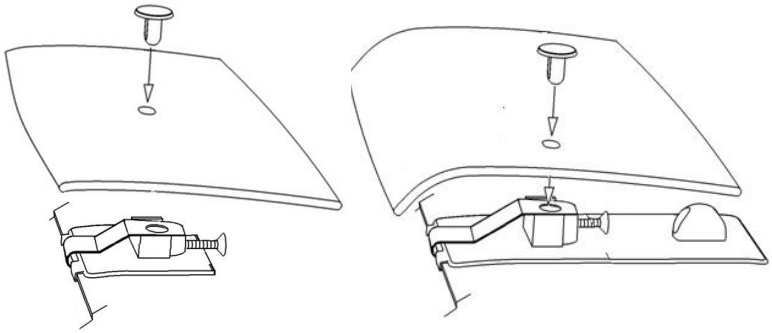

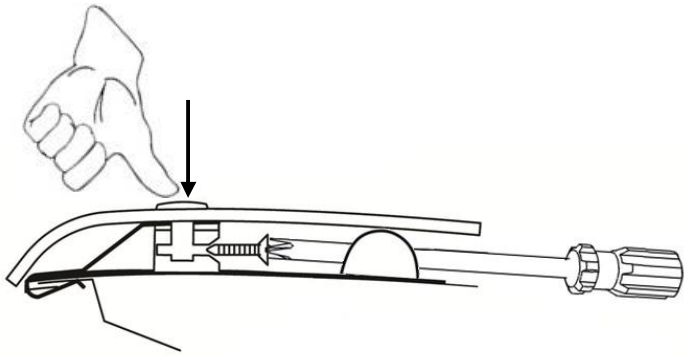

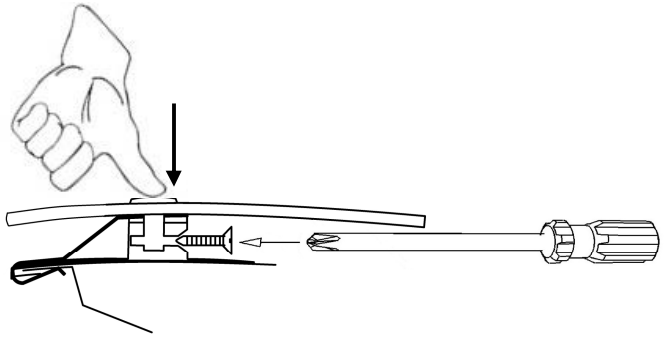

11. Place the protector on the pedestals and drop a pin through the protector and into the pedestal. Maintain slight pressure on the pin, to ensure proper seating of the components, while simultaneously tightening the screw. Repeat for remaining pedestal locations.

CARE

Hand clean the protector using a mild soap and water solution or plastic cleaner only.
Avoid automatic car-wash equipment where a brush and/or soft cloth come in contact with the hood protector. Touch-less style automatic car-wash equipment is less likely to harm the hood deflector.
Periodically check to confirm the protector is securely attached to the hood.

WARNINGS

Do not pull/push on the protector when opening/ closing the hood.