Accessory	Application	Part #
FORMFIT Side Window Visors	**Infiniti QX60 (2022-2026)**	**SD13D22**

HARDWARE KIT

3M Double-sided Body Moulding Tape - Already applied to the visor
2 – Surface Cleaner
4 – Adhesive Pedestals
4 – # 6 x 5/8" Flat Head Screws
4 – Pins
1 – Wooden "Wet-out" stick

TOOLS REQUIRED

Phillips Screwdriver # 2 Long Shaft
Tape Measure
Masking Tape

Attention: This product uses a 3M adhesive that requires installation and curing temperatures of 15° to 43°C (60° to 110°F) for 1 hour to develop maximum adhesion to the vehicle surface. **Failure to install this product at the proper temperature or allow adequate curing time before use is not covered under warranty.**

1. Insert a pin through the hole in the side visor and into the adhesive backed pedestal.***Note:*** *See illustration below for pedestal orientation.* Maintain slight pressure on the pin, to ensure proper seating of the components, while simultaneously tightening the screw. Repeat for the other three pieces. **Do not remove the protective backing.**

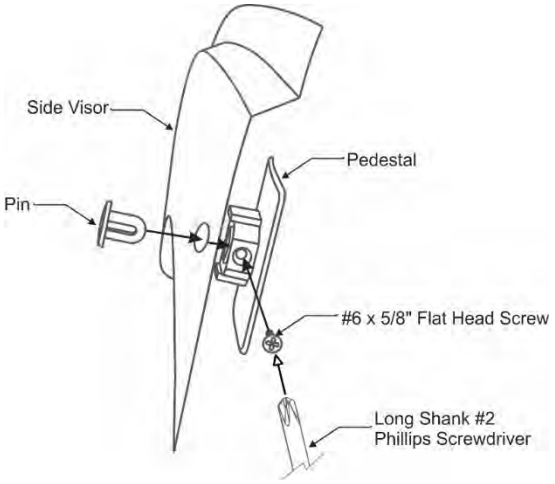

Pedestal Orientation

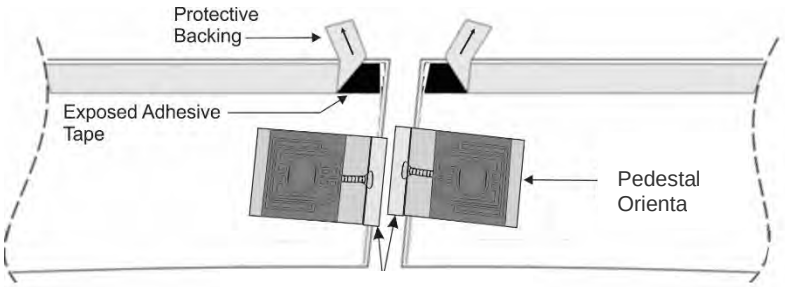

2. The visors mount to the window frames of the doors. Ensure those areas are clean and dry.
3. Start with the driver's side front door of the car.
4. To understand how and where the visors will fit, hold the front door visor up to the car. Align the top edge of the visor flush with the top of the door frame. Center the visor on the door, front-to-back. The visor is 3-4mm shorter than the door so there will be a 1-2mm gap at the mirror base and at the rear edge of the door. These gaps allow for expansion on hot days. Repeat this step for the rear door visor. There will also be a 1-2mm gap at each end. ***See illustration.***

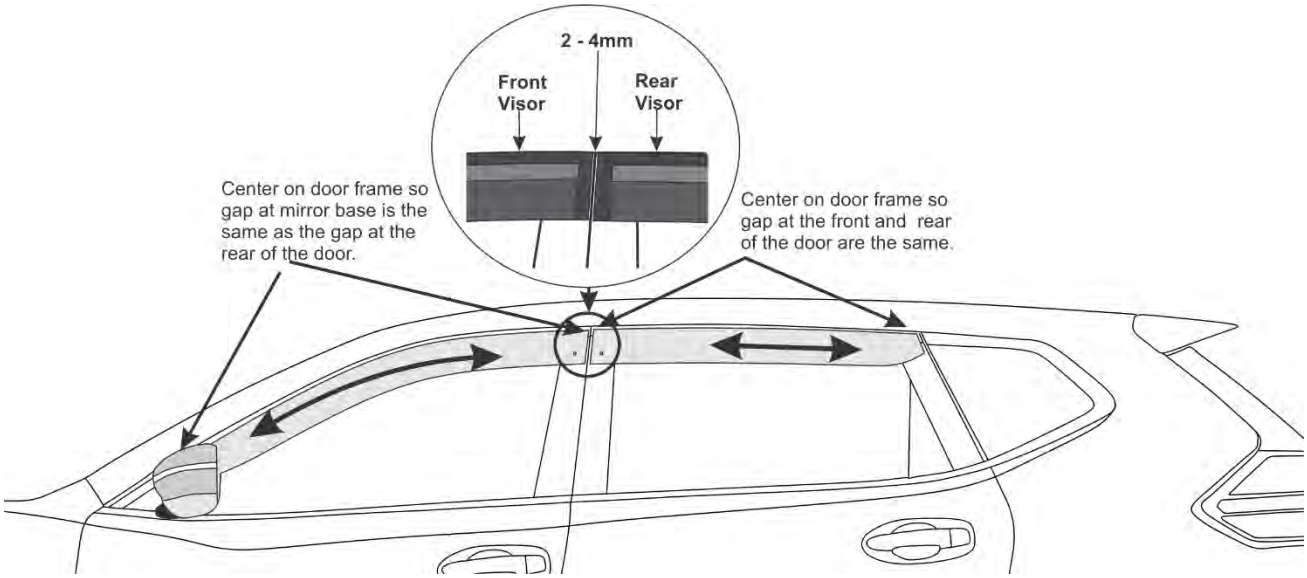

5. Clean all the mounting areas aggressively with the surface cleaner to remove any fingerprints, oils or waxes that may be on the surface. Take care to not contaminate the surface after cleaning. Any surface contaminants will reduce the adhesion of the 3M tape.

6. Starting at the pedestal end, peel the first 2-3 cm (1/2-1 1/2 inches) of the protective backing from the adhesive tape on the flange of the visor. Press the visor into place as determined above. Work forward, removing the protective backing from the tape and pressing the part into place. Use extreme care to place the visor as described. Once the tape is in place it is nearly impossible to remove it.

7. Gently lift visor away from door frame so the pull tab on the adhesive pedestal is accessible. Pull the protective backing from the pedestal and firmly press the visor onto the door frame. Using the wooden “wet-out” stick supplied, apply pressure to the surface of the adhesive pedestal. This will ensure there is maximum contact between the adhesive tape and door frame.

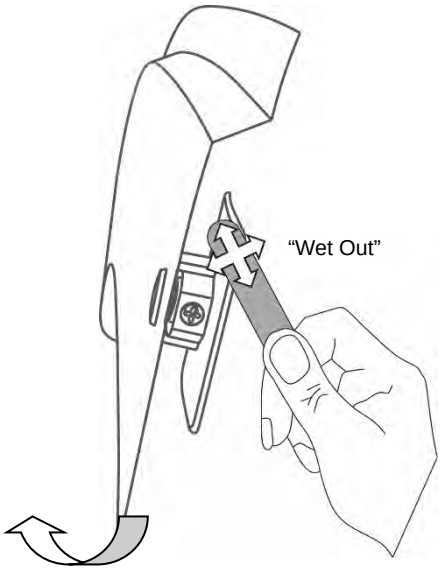

8. Once the visor is in place press down **hard** along the entire flange area to make sure that the adhesive tape is fully adhered to the vehicle.
9. Repeat steps 5-8 for the remaining visors. When installing the rear door visors, start at the adhesive pedestal end of the visor and work back.

CARE INSTRUCTIONS

Clean the visors with a mild soap and water solution or plastic cleaner only. Do not use chemicals or solvents. Periodically check to make sure the visors are secure. Avoid using automatic car washes.